Parts book

for high speed direct drive
lockstitch machine
with built-in energy saving motor

Tronic 1 NEO

texi

CONTENTS

A. Machine Frame & Miscellaneous Cover Components 1

B. Main Shaft & Thread Take-up Cover Components 3

C. Hang Lifter & Tension Release Components 6

D. Hook of Driving Shaft Components 8

E. Feed Mechanism Components 10

F. Drive-by-wire Components 13

G. Lubrication Components 15

H. Presser Foot Components of Oil Plate Knee Lifter 17

I. Thread Stand Components 19

J. Auxiliaries 21

A. Machine Frame & Miscellaneous Cover Components

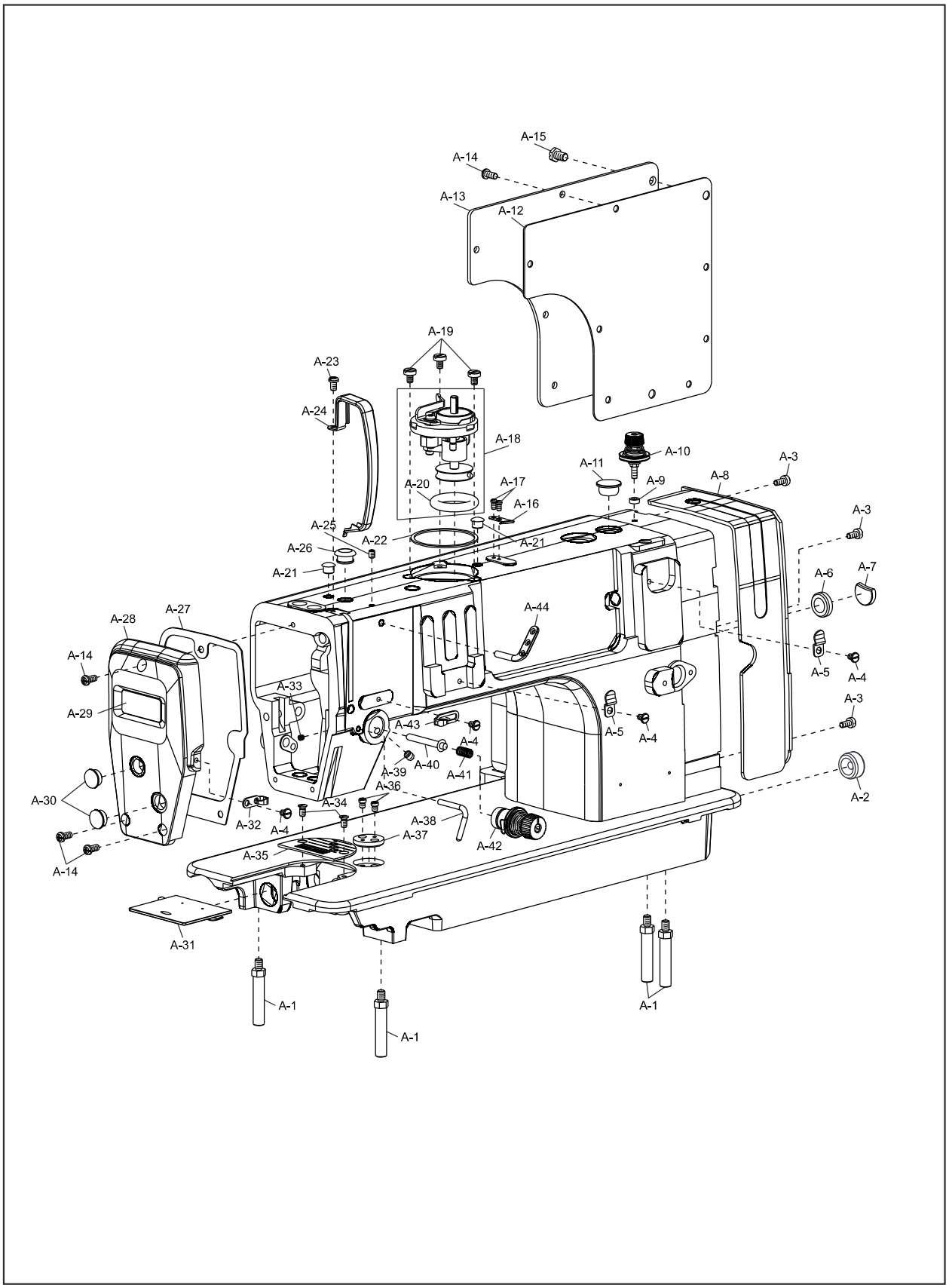

A. Machine Frame & Miscellaneous Cover Components

Ref. No.	Part No.	Description	QTY
A-1	10002577	Bed screw stud	4
A-2	10008941	Rubber plug	1
A-3	10010066	Screw SM11/64"×40	3
A-4	10008973	Screw SM11/64"×40	4
A-5	10062047	Slide buckle	2
A-6	10008975	Rubber plug	1
A-7	10053849	Rubber plug	1
A-8	10068593	Plastic plate	1
A-9	10062565	Washer	1
A-10	10062049	Bobbin thread tension ASM	1
A-11	10009576	Rubber plug	1
A-12	10062030	Side plate gasket	1
A-13	20024052	Side plate	1
A-14	10008972	Screw SM3/16″×28	10
A-15	10062046	Screw	2
A-16	10011149	Thread cutter	1
A-17	10050423	Screw SM9/64"×40	2
A-18	10031086	Bobbin wider ASM.	1
A-19	10004380	Screw SM3/16″×32	3
A-20	10008773	Rubber ring	1
A-21	10008943	Rubber ring	2
A-22	10061911	Bobbin wider ASM. Washer	1
A-23	10008934	Screw SM3/16″×28	1
A-24	10014082	Thread take-up lever cover	1
A-25	10041529	Screw SM3/16″×28	1
A-26	10008942	Rubber ring	1
A-27	10062031	Face plate gasket	1
A-28	10067530	Face plate	1
A-29	10062054	Decorative board	1
A-30	10008977	Rubber ring	2
A-31	10013706	Push plate ASM.	1
A-32	10008937	Arm thread guide left	1
A-33	10009074	Screw M4	1
A-34	10009005	Screw SM11/64″×40	2
A-35	10012131	Needle plate	1
A-36	10004374	Screw SM11/64″×40	2
A-37	10004373	Ruler plate	1
A-38	10039823	Presser bar thread guide	1
A-39	10006264	Screw SM15/64″×28	1
A-40	10062374	Tension release supporting pin	1
A-41	10050348	Spring	1
A-42	10062050	Thread take-up device	1
A-43	10008940	Arm thread guide right	1
A-44	10010640	Thread-hole guid	1

B. Main Shaft & Thread Take-up Cover Components

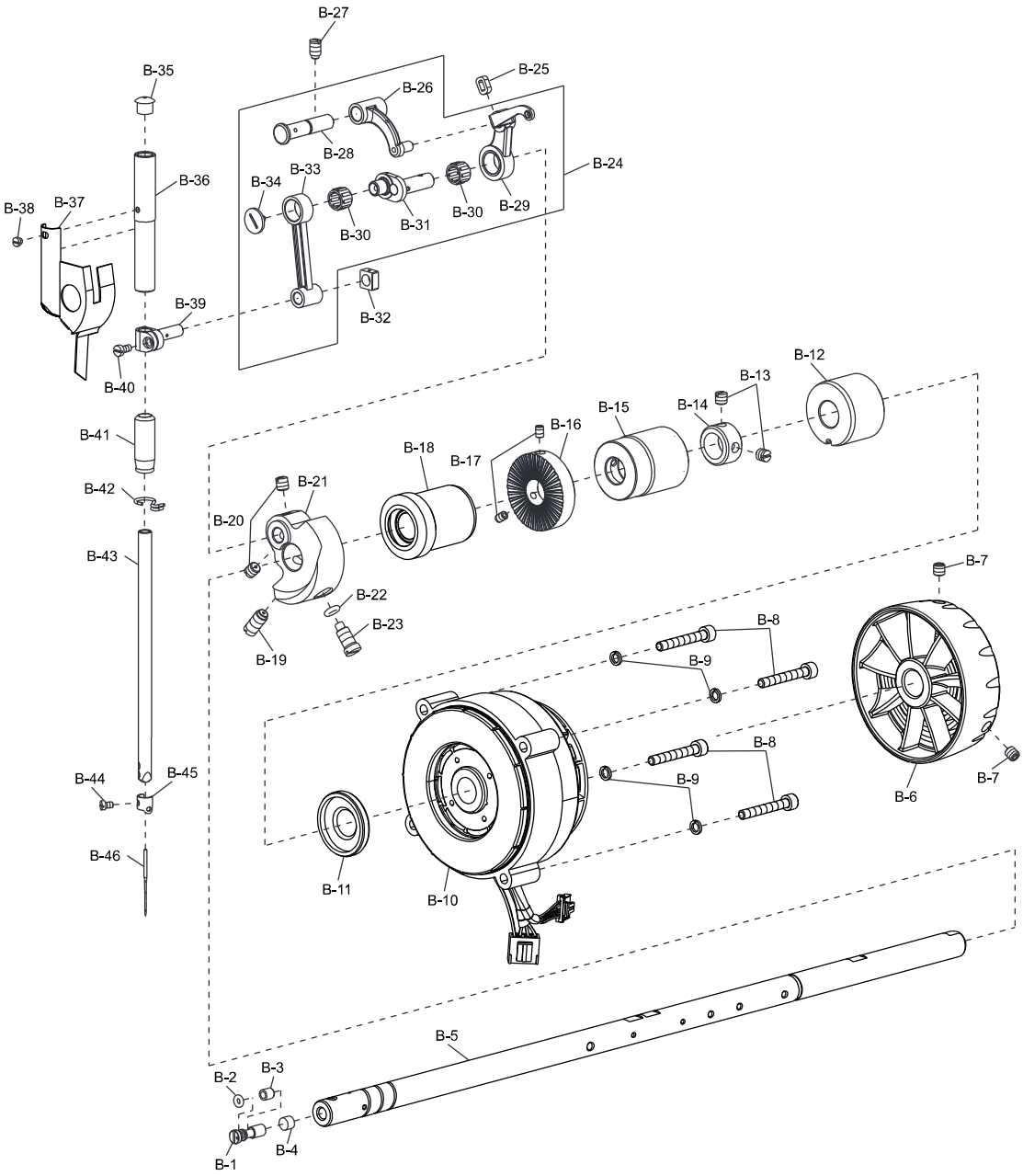

B. Main Shaft & Thread Take-up Cover Components

Ref. No.	Part No.	Description	QTY
B-1	10010504	Adjusting pin	1
B-2	10010538	O-ring 6.46×1.78	1
B-3	10010540	Sleeve of adjusting pin	1
B-4	10010541	Roler felt	1
B-5	10062373	Main shaft	1
B-6	20023713	Head wheel	1
B-7	10011232	Screw M6×6	2
B-8	10003100	Screw M5×35	4
B-9	10005537	Washer 5	4
B-10	10053257	Motor ASM.	1
B-11	10058049	Oil seal	1
B-12	10048486	Shaft sleeve	1
B-13	10005020	Screw SM1/4"×40	2
B-14	10048496	Thrust collar	1
B-15	10048484	Shaft sleeve	1
B-16	10004472	Driving wheel	1
B-17	10012062	Screw SM11/64″×40	2
B-18	10061912	Shaft sleeve	1
B-19	10010082	Screw SM9/32″×28	1
B-20	10010065	Screw SM1/4"×40	2
B-21	10012203	Crank	1
B-22	10010534	O-ring 9.2×2.4	1
B-23	10010545	Screw	1
B-24	10047592	Thread take-up lever ASM.	1
B-25	10010539	Oil resistant cover	1
B-26	10010535	Connecting rod	1
B-27	10010083	Screw SM15/64″×28	1
B-28	20019236	Pin ASM.	1
B-29	10038474	Thread take-up lever	1
B-30	10014107	Needle bearing K8×12×7.8	2
B-31	10004144	Crank ASM.	1
B-32	10010586	Sliding block	1
B-33	10010592	Connecting rod	1
B-34	10010537	Screw	1
B-35	10010587	Rubber plug	1
B-36	10011063	Shaft sleeve	1
B-37	10056308	ARM oil shield ASM.	1
B-38	10005558	Screw SM1/8"×44	1
B-39	10010590	Joint pin	1
B-40	10030286	Screw SM9/64″×40	1
B-41	10014117	Shaft sleeve	1

B. Main Shaft & Thread Take-up Cover Components

Ref. No.	Part No.	Description	QTY
B-42	10005916	Thread guide	1
B-43	10021295	Needle bar	1
B-44	10010588	Screw SM1/8"×44	1
B-45	10005945	Thread guide	1
B-46	*	Needle	1

C. Hang Lifter & Tension Release Components

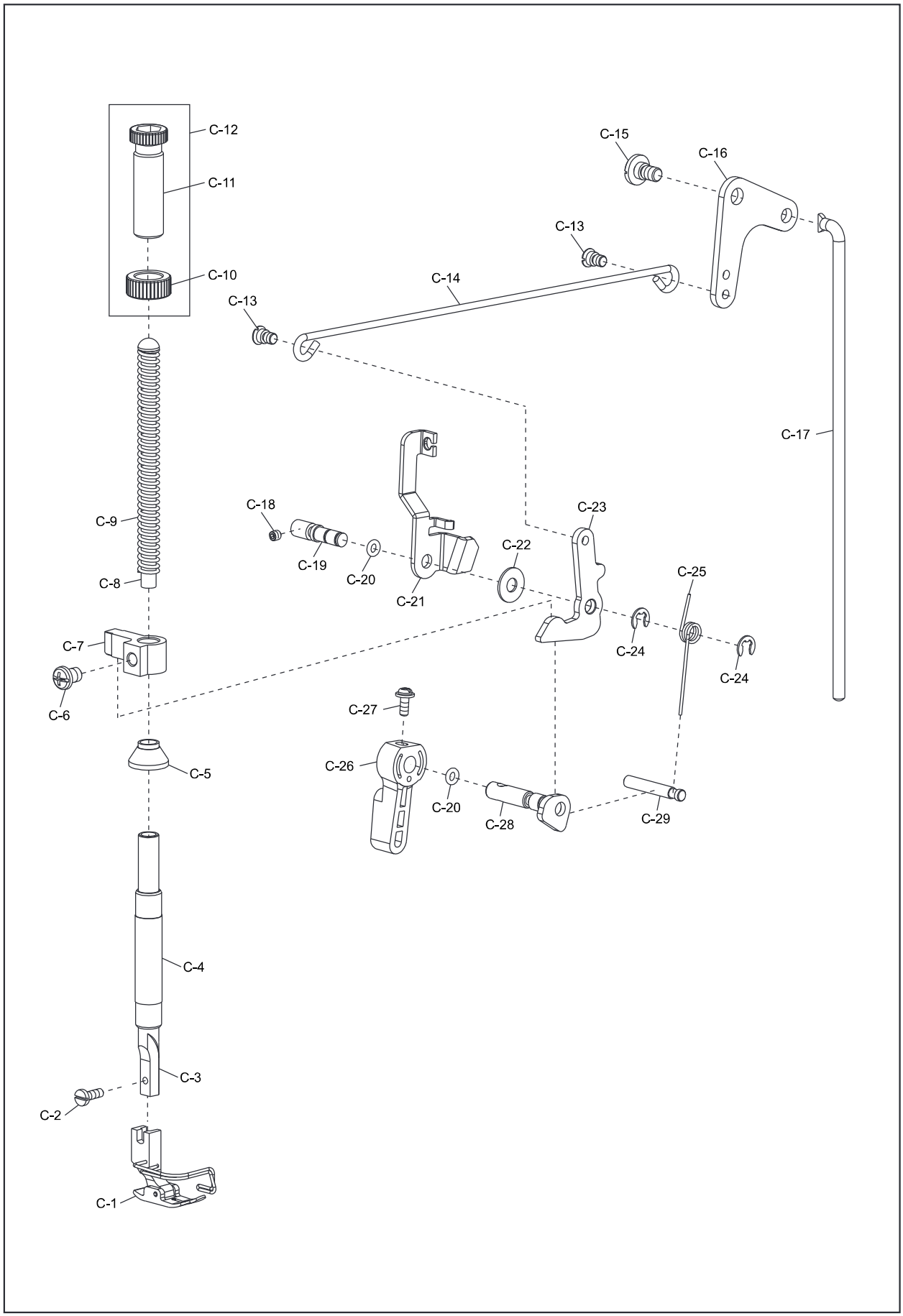

C. Hang Lifter & Tension Release Components

Ref. No.	Part No.	Description	QTY
C-1	10052532	Presser foot ASM.	1
C-2	10010650	Screw SM9/64″×40	1
C-3	10010646	Presser bar	1
C-4	10014118	Shaft sleeve	1
C-5	10011457	Oil protector cover	1
C-6	10000325	Screw M6×8	1
C-7	10039365	Presser guide bar bracket	1
C-8	10004439	Presser guide bar	1
C-9	10004473	Spring	1
C-10	10062022	Nut	1
C-11	10062021	Screw	1
C-12	10062052	Screw ASM.	1
C-13	10010651	Screw SM3/16″×32	2
C-14	10050189	Lifting lever connecting rod	1
C-15	10010652	Screw	1
C-16	10053738	Lifting lever link components	1
C-17	10010020	Connecting rod vertical	1
C-18	10009074	Screw M4×4	1
C-19	10039373	Pin	1
C-20	10010027	O-ring 3.68×1.78	2
C-21	10053739	Tension release plate	1
C-22	10050590	Snap ring	1
C-23	10050188	Lifting lever	1
C-24	10013038	Closing ring 5×0.8	2
C-25	10052046	Spring	1
C-26	10062023	Hand lifter	1
C-27	10010016	Screw SM9/64″×40	1
C-28	10050190	Hand lifter CAM ASM.	1
C-29	10039374	Pin	1

D. Hook of Driving Shaft Components

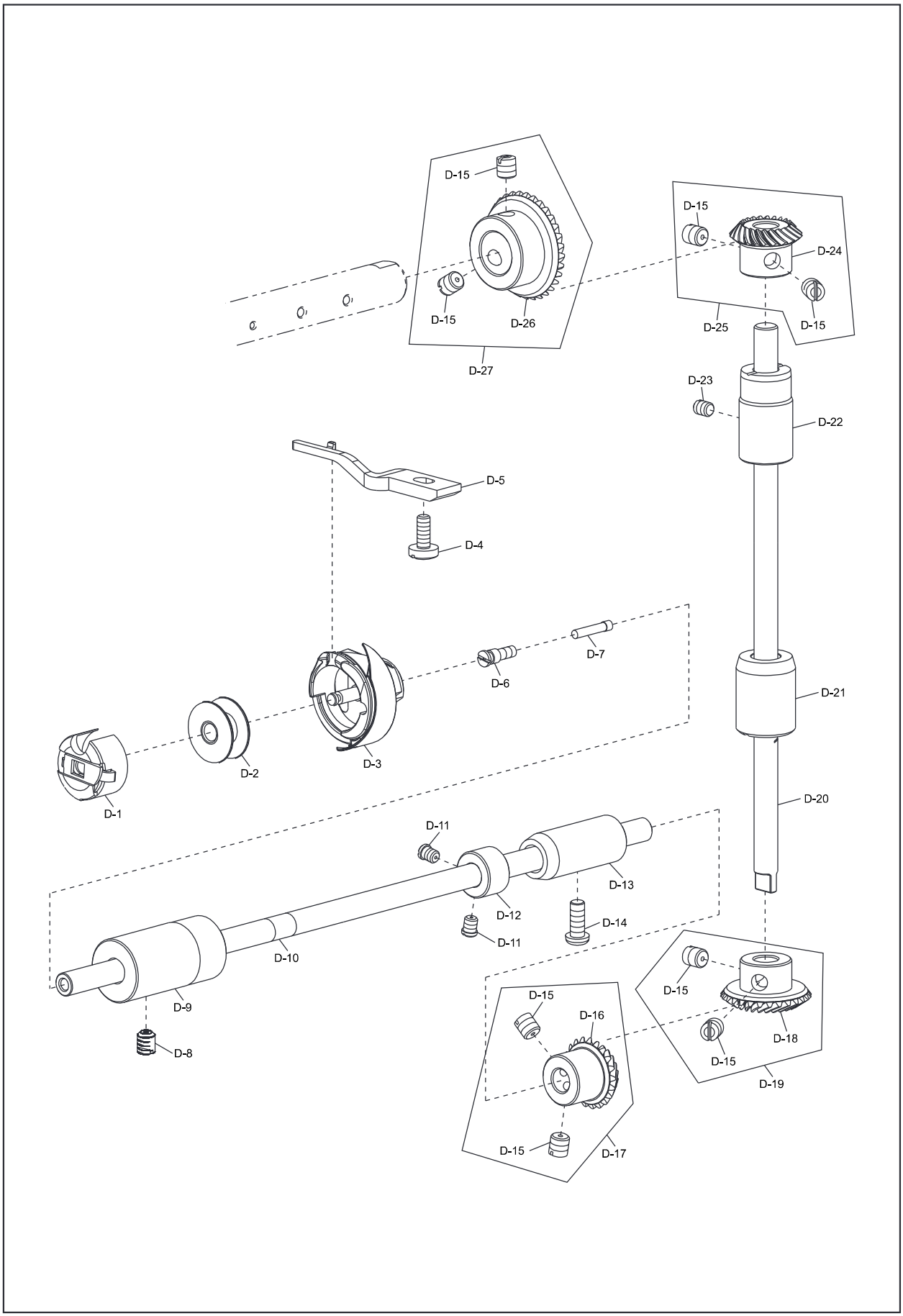

D. Hook of Driving Shaft Components

Ref. No.	Part No.	Description	QTY
D-1	*	Bobbin case	1
D-2	10010060	Bobbin	1
D-3	10007155 / SMH-7.94B	Hook	1
D-4	10010066	Screw SM11/64"×40	1
D-5	10031260	Positioning finger	1
D-6	10010064	Screw	1
D-7	10010063	Oil wick	1
D-8	10010506	Screw SM15/64"×28	1
D-9	10058811	Shaft sleeve	1
D-10	10008821	Hook driving shaft	1
D-11	10010059	Screw SM11/64"×40	2
D-12	10048497	Thrust collar	1
D-13	10059385	Shaft sleeve	1
D-14	10010030	Screw SM3/16"×28	1
D-15	10010065	Screw SM1/4"×40	8
D-16	10003937	Gear	1
D-17	10002560	Gear ASM.	1
D-18	10010029	Gear	1
D-19	10002509	Gear ASM.	1
D-20	10010057	Upright shaft	1
D-21	10048490	Shaft sleeve	1
D-22	10048488	Shaft sleeve	1
D-23	10010030	Screw SM3/16″×28	1
D-24	10010062	Gear	1
D-25	10002561	Gear ASM.	1
D-26	10010056	Gear	1
D-27	10002445	Gear ASM.	1

E. Feed Mechanism Components

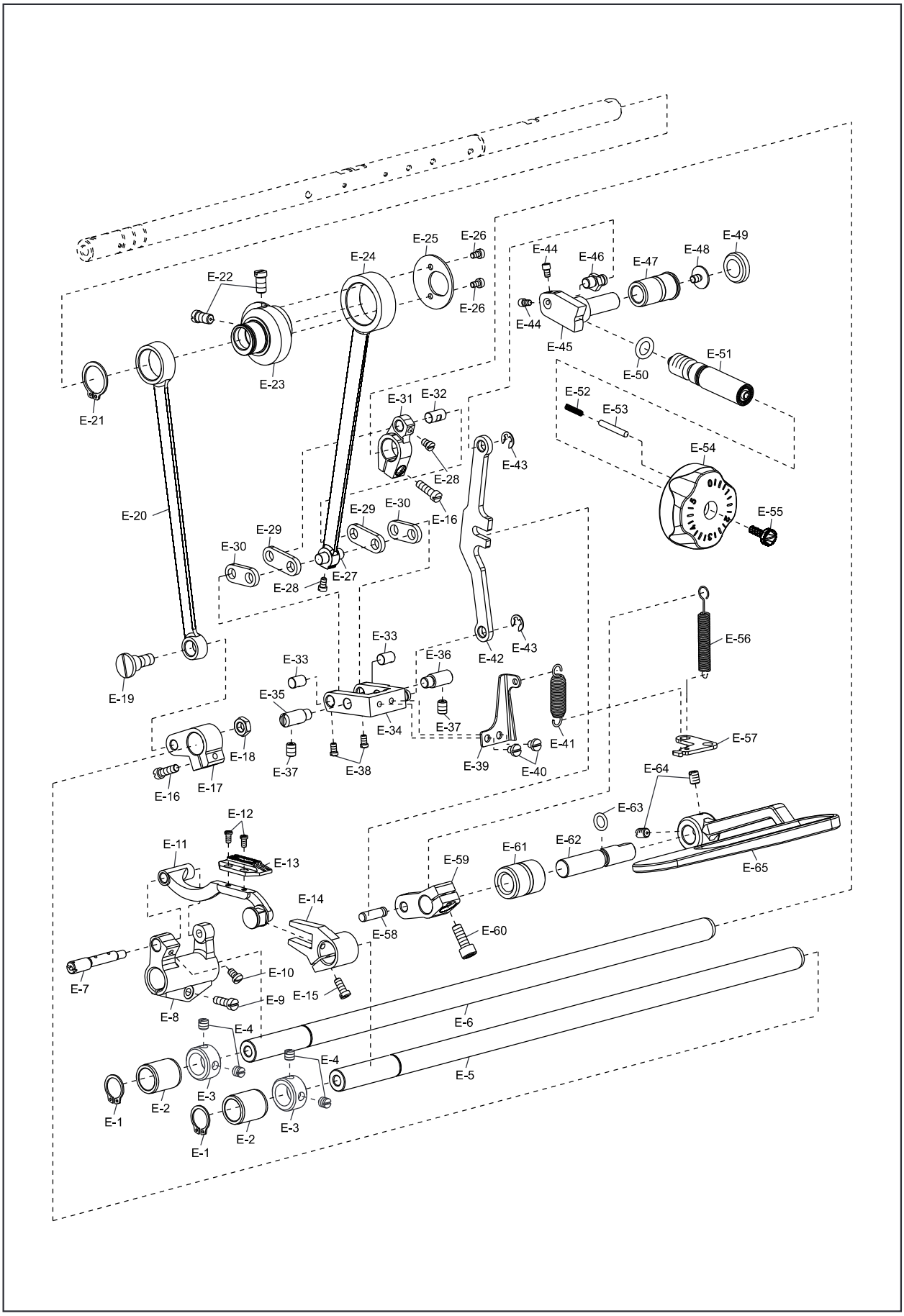

E. Feed Mechanism Components

Ref. No.	Part No.	Description	QTY
E-1	10010090	Closing ring 13.8×1	2
E-2	10014116	Shaft sleeve	2
E-3	10048496	Thrust collar	2
E-4	10005020	Screw SM1/4"×40	4
E-5	10010097	Feed driving shaft	1
E-6	10010073	Feed rocker shaft	1
E-7	10004440	Pin	1
E-8	10004474	Feed bar driving crank	1
E-9	10004993	Screw SM3/16"×28	1
E-10	10010074	Screw SM11/64"×40	1
E-11	20017406	Feed bar ASM.	1
E-12	10010099	Screw SM1/8"×44	2
E-13	10011066	Feed dog	1
E-14	10010100	Crank	1
E-15	10004628	Screw SM11/64"×40	1
E-16	10010095	Screw SM3/16"×28	2
E-17	10010086	Crank	1
E-18	10004475	Nut SM9/32″×28	1
E-19	10010091	Screw	1
E-20	10010084	Connecting rod	1
E-21	10010089	Closing ring 18.5×1.2	1
E-22	10010092	Screw SM1/4"×40	2
E-23	10010115	Feed drive eccentric cam	1
E-24	10010072	Connecting rod	1
E-25	10010098	Thrust cover	1
E-26	10010643	Screw SM9/64″×40	2
E-27	10010069	Pin	1
E-28	10010071	Screw SM9/64"×40	2
E-29	10048696	Connecting plate	2
E-30	10048736	Connecting plate	2
E-31	10010076	Crank	1
E-32	10010096	Pin	1
E-33	10010087	Pin	2
E-34	10010088	Feed adjusting ASM.	1
E-35	10010102	Pin	1
E-36	10058783	Pin	1
E-37	10010678	Screw SM15/64″×28	2
E-38	10010197	Screw SM9/64"×40	2
E-39	10010282	Plate	1

E. Feed Mechanism Components

Ref. No.	Part No.	Description	QTY
E-40	10010285	Screw SM11/64"×40	2
E-41	10010284	Spring	1
E-42	10006317	Feed adjust rod	1
E-43	10010649	Closing ring 5.1×0.6	2
E-44	10051742	Screw SM9/64″×40	2
E-45	10053433	Feed regulator	1
E-46	10026886	Pin	1
E-47	10053434	Shaft sleeve	1
E-48	10010238	Screw	1
E-49	10008975	Rubber plug	1
E-50	10010240	O-ring 9.2×2.7	1
E-51	10062375	Screw	1
E-52	10013869	Spring	1
E-53	10013870	Pin	1
E-54	10063088	Feed dial	1
E-55	10010281	Screw SM3/16"×28	1
E-56	10004430	Spring	1
E-57	10010235	Plate	1
E-58	10010287	Pin	1
E-59	10039853	Crank	1
E-60	10009008	Screw	1
E-61	10014119	Shaft sleeve	1
E-62	10062033	Reverse feed shaft	1
E-63	10010243	O-ring 7.8×2	1
E-64	10040504	Screw M6	2
E-65	20024054	Reverse feed control lever	1

F. Drive-by-Wire Components

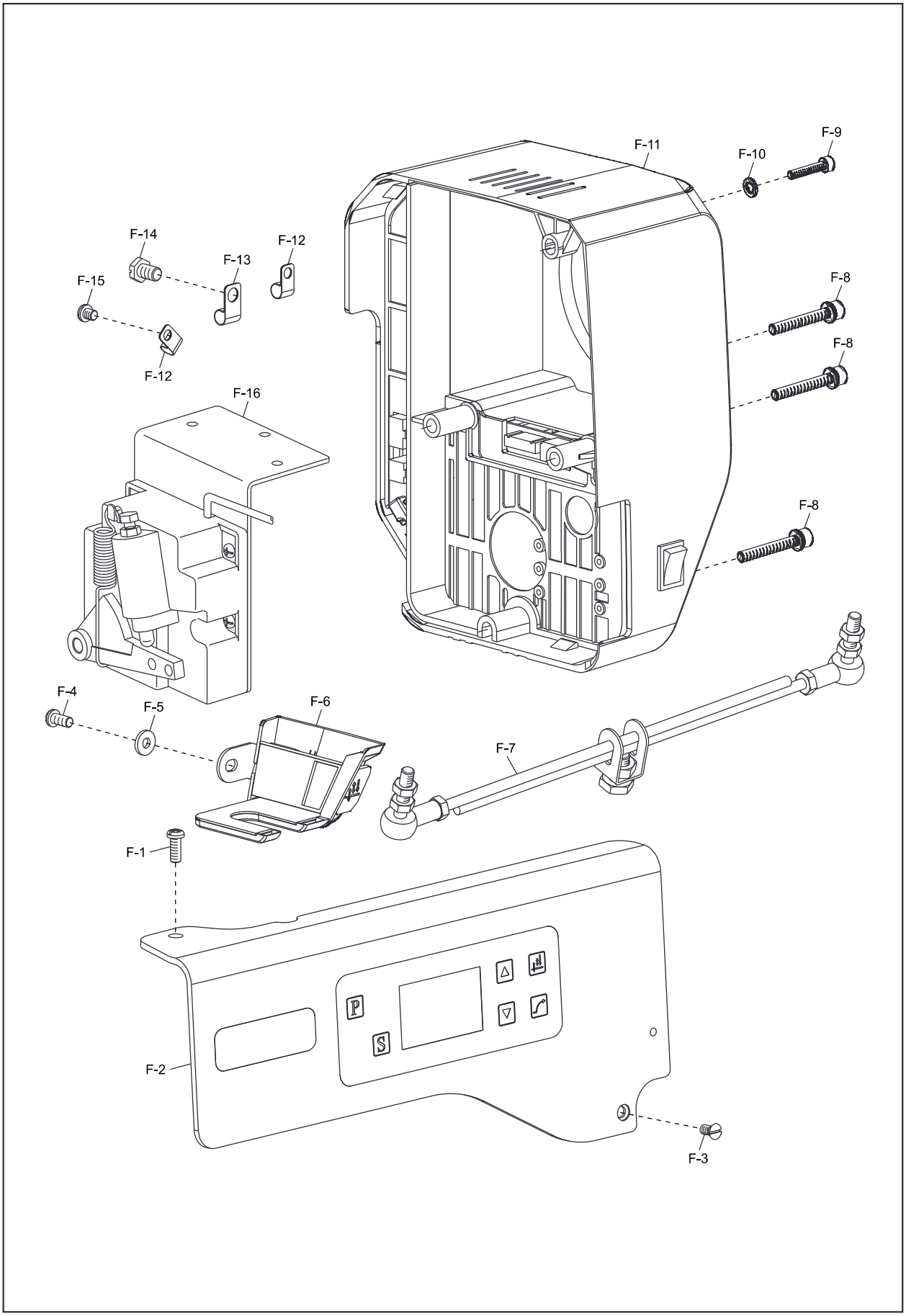

F. Thread Trimmer Components

Ref. No.	Part No.	Description	QTY
F-1	10063944	Screw SM3/16″×28	1
F-2	10068595	Operation screen ASM.	1
F-3	10009005	Screw SM11/64″×40	1
F-4	10008972	Screw SM3/16″×28	1
F-5	10011168	Washer 4.8×11.6×1.6	1
F-6	10061913	Led lamp ASM.	1
F-7	10042945	Pedal control rod ASM.	1
F-8	10049837	Screw M5×35	3
F-9	10012080	Screw M4×20	1
F-10	10006115	Washer 5.3×9×1	1
F-11	10068594	Control box	1
F-12	10062062	Cord holder 1	2
F-13	10062063	Cord holder 2	1
F-14	10062046	Screw	1
F-15	10010899	Screw SM3/16″×28	1
F-16	10031424	Pedal unit ASM.	1

G. Lubrication Components

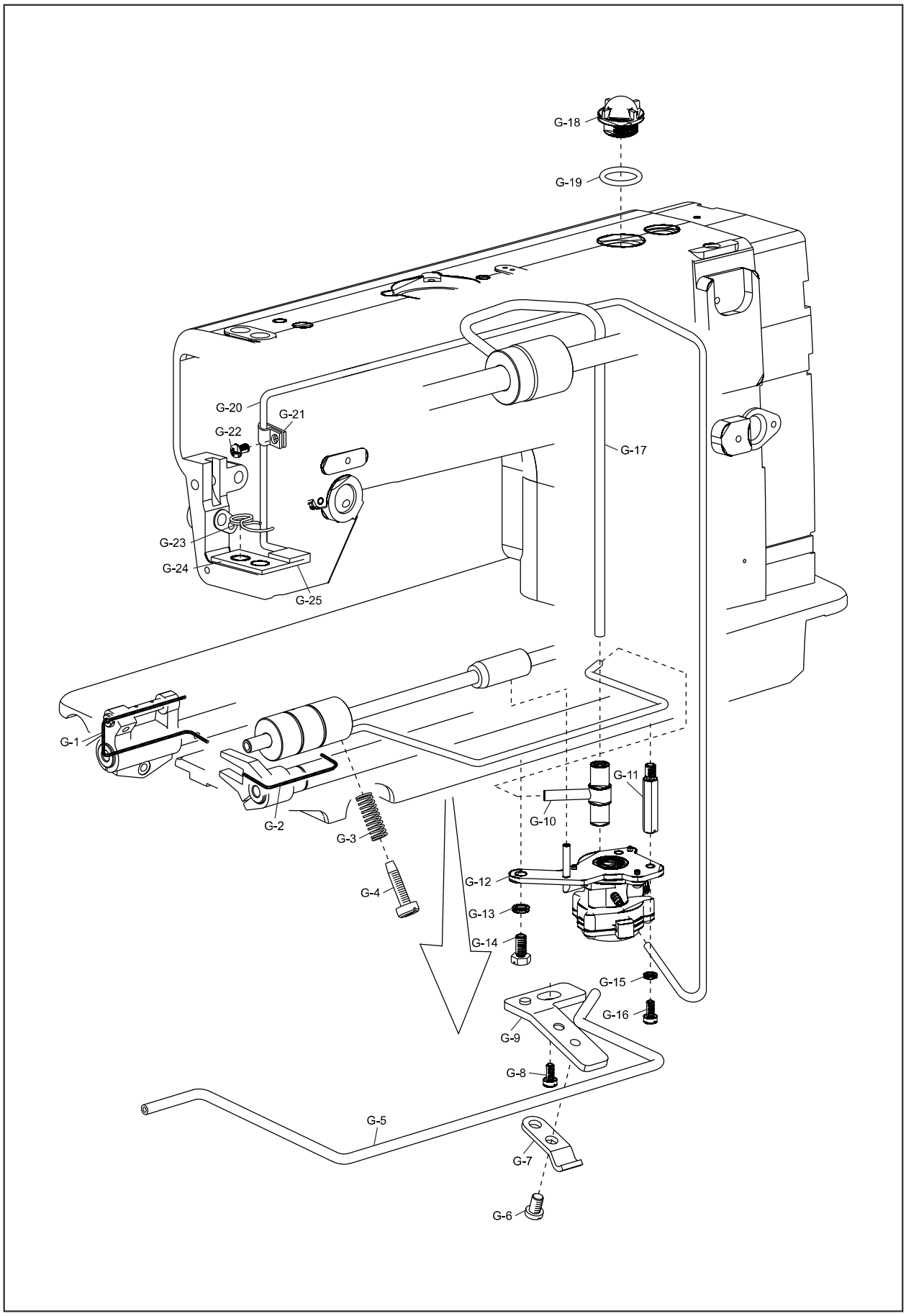

G. Lubrication Components

Ref. No.	Part No.	Description	QTY
G-1	10008067	Oil wick(430mm)	1
G-2	10008067	Oil wick(400mm)	1
G-3	10008806	Spring	1
G-4	10008831	Screw	1
G-5	10008807	Oil tube	1
G-6	10010074	Screw SM11/64"×40	1
G-7	10012445	Tube holder	1
G-8	10010292	Screw SM15/64"×28	1
G-9	10012443	Plate	1
G-10	10010340	Oil connection	1
G-11	10010293	Screw	1
G-12	10008817	Oil pump ASM.	1
G-13	10003077	Washer 6	1
G-14	10050422	Screw SM15/64"×28	1
G-15	10005537	Washer 5	1
G-16	10010066	Screw SM11/64"×40	1
G-17	10023807	Oil tube	1
G-18	10008938	Oil sight window	1
G-19	10008939	O-ring 19×3	1
G-20	10007795	Oil tube(690mm)	1
G-21	10004476	Holder	1
G-22	10008934	Screw SM3/16″×28	1
G-23	10042077	Oil felt preser	1
G-24	10054207	Roler felt	1
G-25	20019651	Oil return tube ASM.	1

H. Presser Foot Components of Oil Plate Knee Lifter

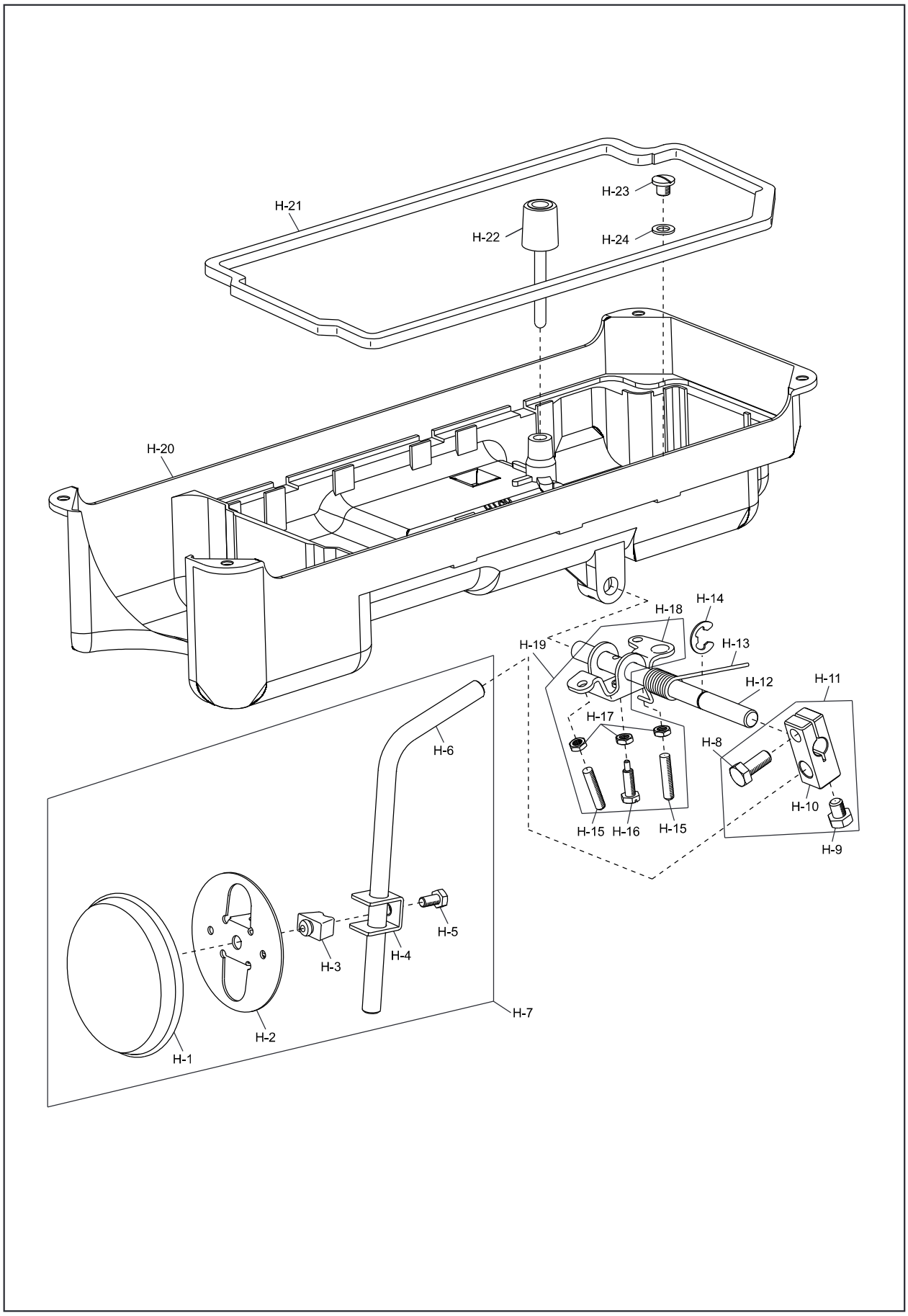

H. Drive-by-wire Components

Ref. No.	Part No.	Description	QTY
H-1	10004223	Knee pressing cover	1
H-2	10003891	Knee pressing plate	1
H-3	10003900	Knee pressing plate rubber	1
H-4	10003897	Knee pressing plate holder	1
H-5	10003894	Screw SM15/64"×28	1
H-6	10003901	Knee pressing plate rod	1
H-7	10009985	Knee pressing plate ASM.	1
H-8	10002613	Screw M8×20	1
H-9	10002610	Screw M8×10	1
H-10	10003896	Connection	1
H-11	10002562	Connection ASM.	1
H-12	10003899	Knee pressing shaft	1
H-13	10003893	Spring	1
H-14	10002559	Closing ring 9.8×1	1
H-15	10003895	Screw M6×30	2
H-16	10003898	Screw	1
H-17	10003890	Nut M6×3.2	3
H-18	10009987	Crank	1
H-19	10002563	Crank ASM.	1
H-20	10056895	Oil reservoir	1
H-21	10014194	Oil reservoir gasket	1
H-22	10009984	Pin	1
H-23	10009991	Screw SM5/16"×24	1
H-24	10009988	Rubber ring 7.8×13.5×1.3	1

I. Thread Stand Components

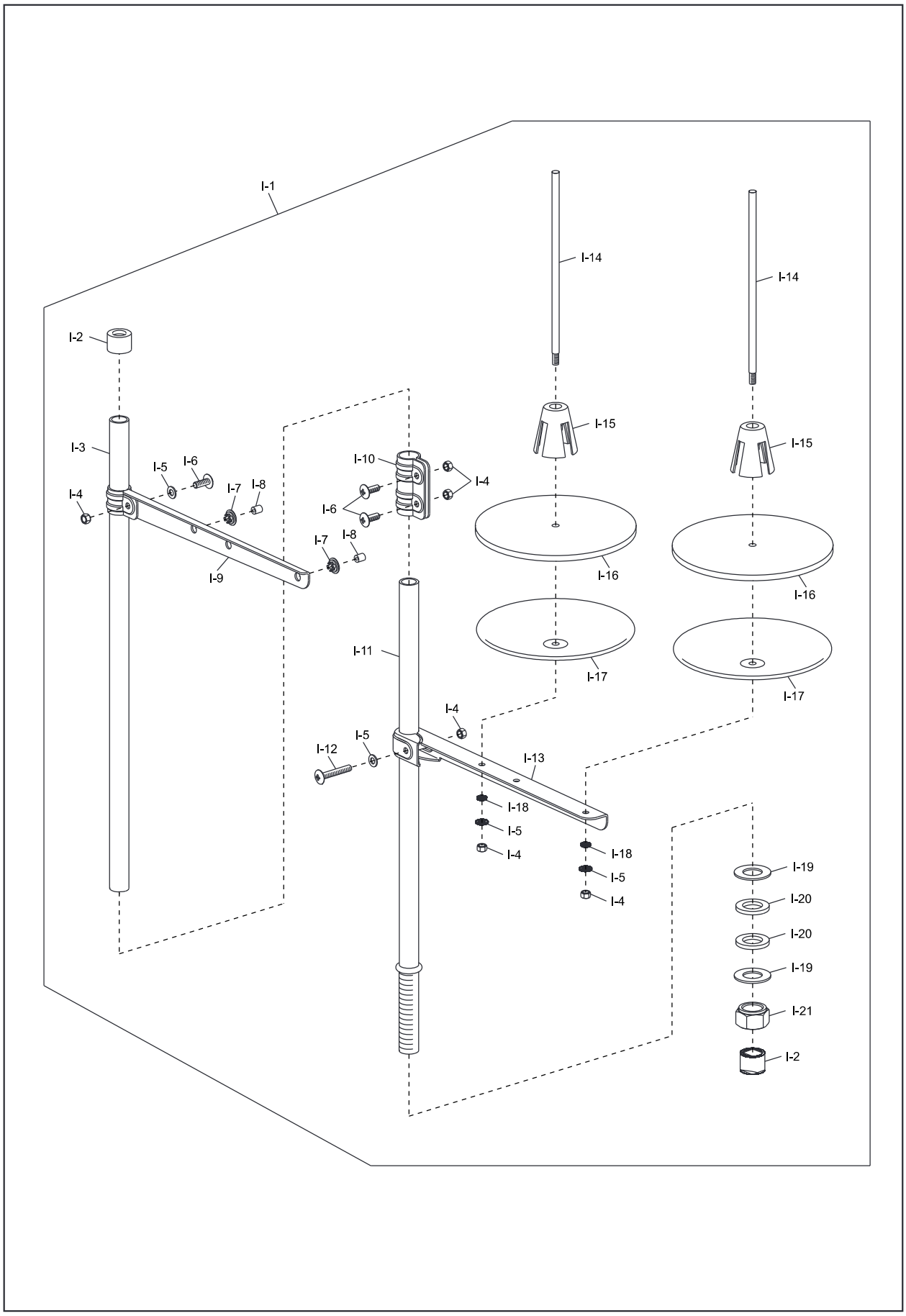

I. Thread Stand Components

Ref. No.	Part No.	Description	QTY
I-1	10061710	Thread stand ASM.	1
I-2	10004282	Column cap	2
I-3	10004293	Column pipe(upper)	1
I-4	10002953	Nut M5	6
I-5	10003022	Washer 5	4
I-6	10003301	Screw M5×14	3
I-7	10004285	Thread guide bushing	2
I-8	10004289	Thread guide pipe	2
I-9	10004298	Thread hanger(upper)	1
I-10	10004286	Column pipe connector	1
I-11	10004291	Column pipe(lower)	1
I-12	10003312	Screw M5×30	1
I-13	10004284	Thread hanger(lower)	1
I-14	10004288	Spool pin	2
I-15	10004287	Spool cushion	2
I-16	10004281	Spool mat	2
I-17	10004299	Spool seat disc	2
I-18	10003077	Washer 5	2
I-18	10004290	Washer 16×30×1.5	2
I-19	10004295	Washer 16.5×27.5×3	2
I-20	10002985	Nut M16	1

J. Auxiliaries

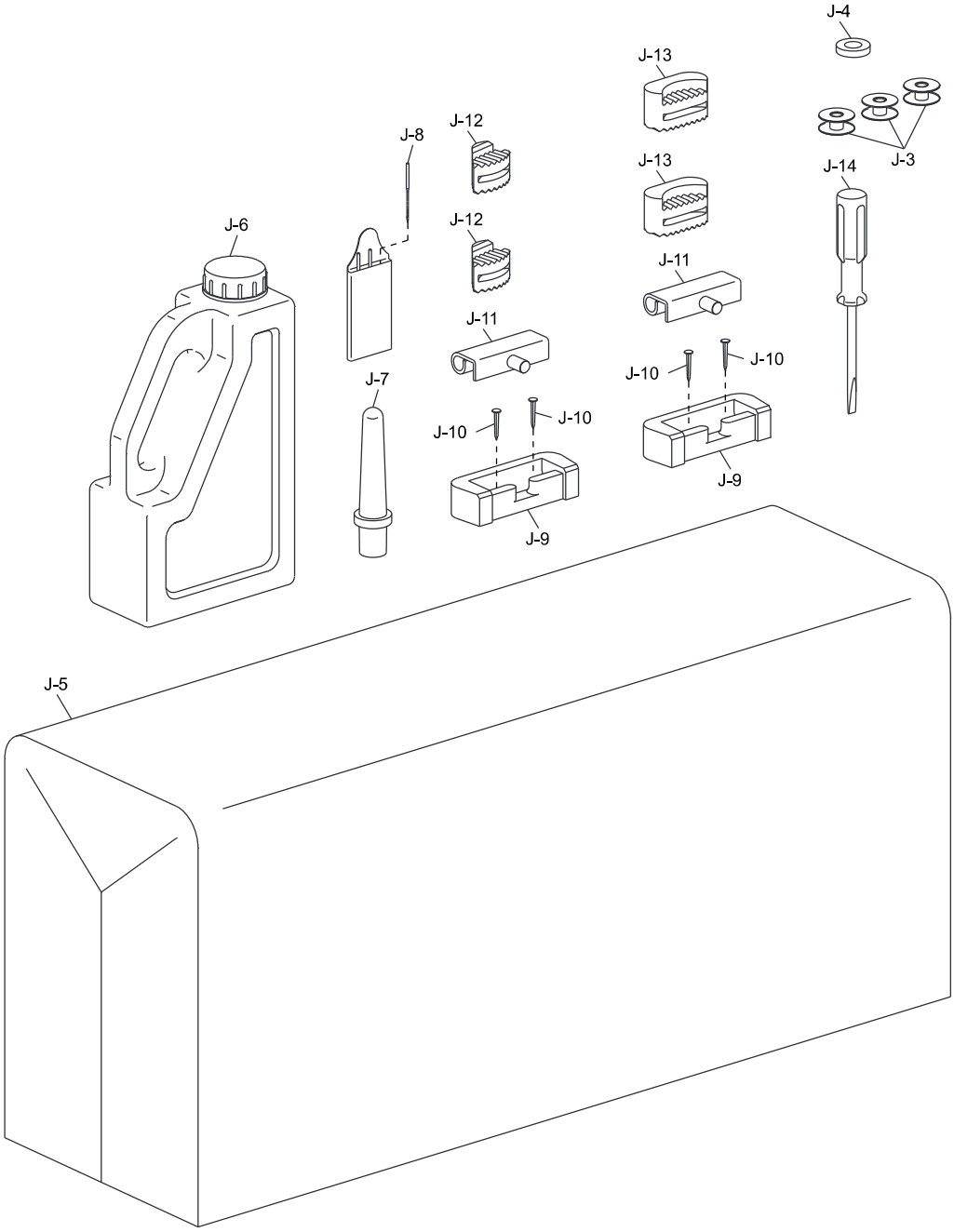

J. Auxiliaries

Ref. No.	Part No.	Description	QTY
J-3	10010060	Bobbin	3
J-4	10003892	Oil reservoir magnet	1
J-5	10008849	Head cover	1
J-6	10060866	Oil bottle with oil	1
J-7	10004514	Head pole	1
J-8	*	Needle DPx5	3
J-9	10011041	Head connecting hook socket	2
J-10	10003889	Nail	4
J-11	10004466	Head connecting hook	2
J-12	10009986	Oil reservoir seat	2
J-13	10009993	Oil reservoir cushion	2
J-14	10010995	Screw driver, middle	1

NOTES

NOTES

texi

Dealer: